MICRO-EPSILON

More Precision.

scanCONTROL

2D/3D laser scanner (laser profile sensors)

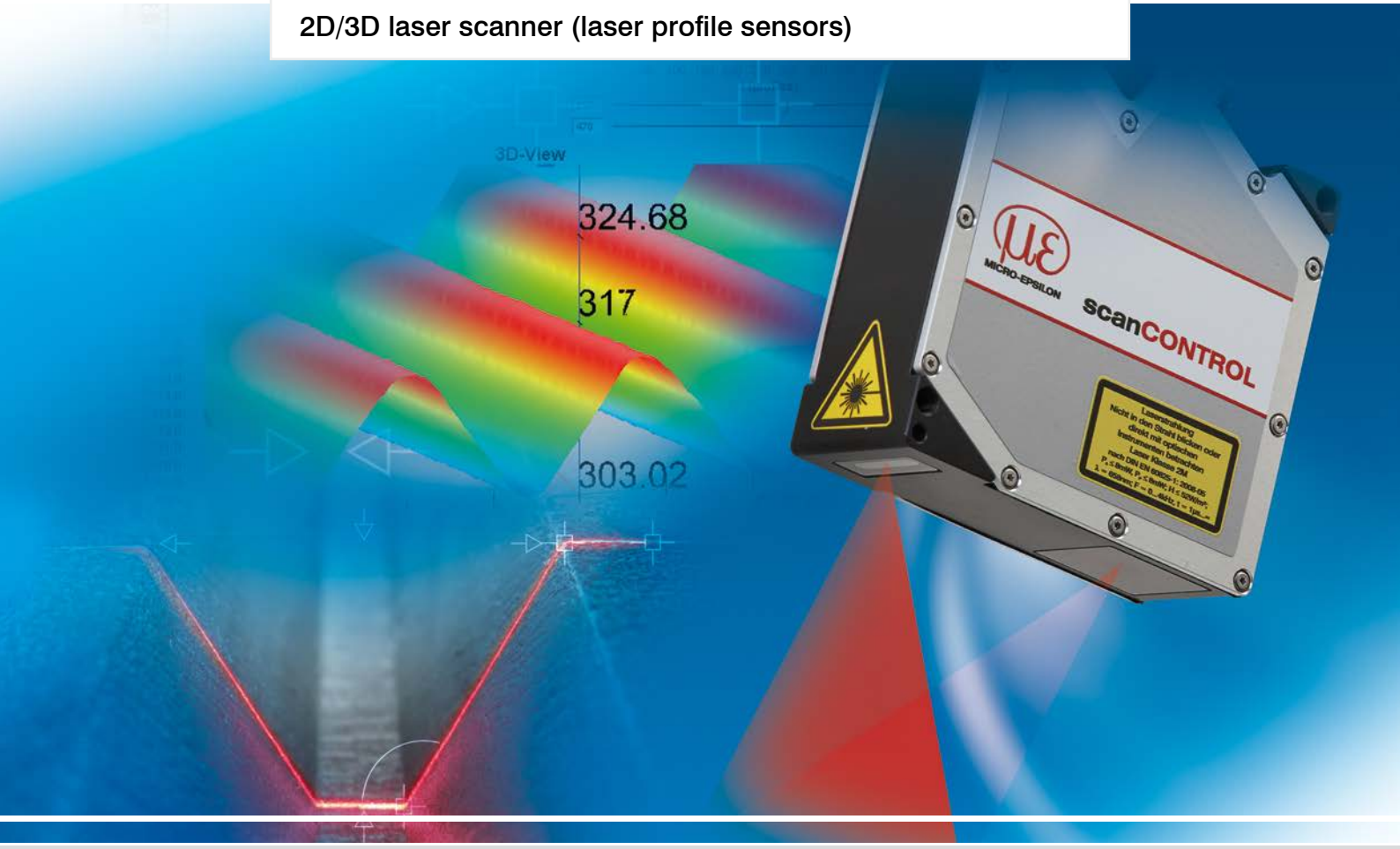

Precise laser scanner for high speed profile acquisition

scanCONTROL 2800 / 2810 consists of a compact sensor and an intelligent controller, which are connected by a cable. The controller outputs both the 2D profile information as well as analysed data.
scanCONTROL has been developed for industrial applications. Using innovative technologies significantly increases the functionality of the system and its flexibility for different applications.
Unlike conventional systems, the scanCONTROL 2800/2810 is not limited to specific applications and is therefore ideal suited for a large variety of industrial fields. The integrated FireWire interface enables both complete control for several scanCONTROL systems via a PC, as well as high data rates.

- z-axis measuring range up to 245mm
- x-axis measuring range up to 140mm
- Profile frequency up to 4,000Hz
- Measuring rate up to 256,000 points per second
- z-axis reference resolution <2µm
- Resolution x-axis up to 1,024 points

High measuring rate

Fast quality measurement is guaranteed by the high measuring rate of up to 256,000 measuring points per second. A profile frequency of up to 4,000 profiles per second can be achieved, depending on the resolution and measuring range.

Profile resolution scanCONTROL 2800/2810

A profile consists of a maximum of 1024 points with each point having a calibrated x and z coordinate. These points are acquired simultaneously across the entire line and output as a 2D line for real-time evaluation of the profile.

scanCONTROL 2800

The scanCONTROL 2800 sensors are the industrial standard sensors for high resolution and fast applications. The sensor provides a profile frequency of up to 4,000Hz and 256,000 measuring points per second.

scanCONTROL 2810

The SMART series scanCONTROL 2810 offers a Plug & Play solution with integrated controller for simple measurement tasks and profile analysis. The sensor design is identical to the 2800 series.

HIGHSPEED: **Calibrated profile data**

The scanCONTROL 2800 models are used for the transfer of calibrated profile data for external profile analysis, for example in a PC. The profile information is also transferred via the same interface. Details of the software interface can be found in the „Integrating scanCONTROL in application software“ chapter.

HIGH-SPEED
scanCONTROL 2800-10
scanCONTROL 2800-25
scanCONTROL 2800-100

Scope of delivery:
Sensor, controller, power supply cable 3m, FireWire cable 3m, sensor protocol, Demo CD incl. SDK

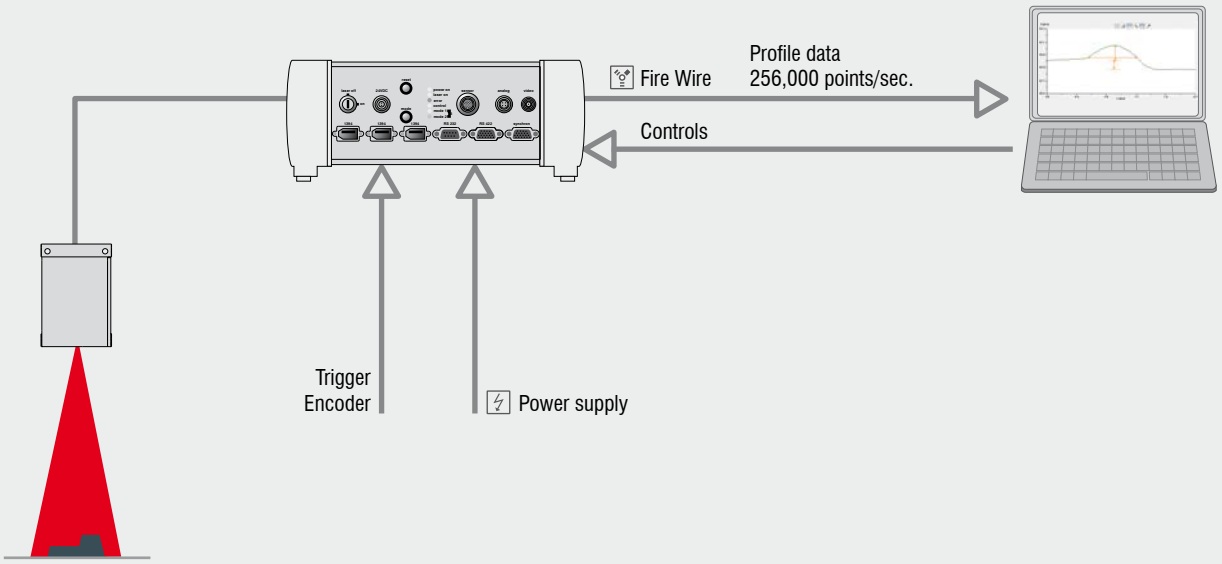

SMART: **Profile analysis**

The SMART series scanCONTROL 2810 offers a Plug & Play solution within the integrated controller for simple measurement tasks such as step, angle, seam and groove inspection. The sensor is programmed via a PC using the scanCONTROL Configuration Tools. This setup is stored inside the controller. The sensor can run in the standalone mode without a PC. In addition to the measurement output via RS422, switch outputs and analogue measuring values are available.
The RS422 can be programmed as a serial interface (measurement value output).

SMART
scanCONTROL 2810-10
scanCONTROL 2810-25
scanCONTROL 2810-100

Scope of delivery:
Sensor, controller, power supply cable 3m, FireWire cable 3m, sensor protocol, Software Configuration Tools

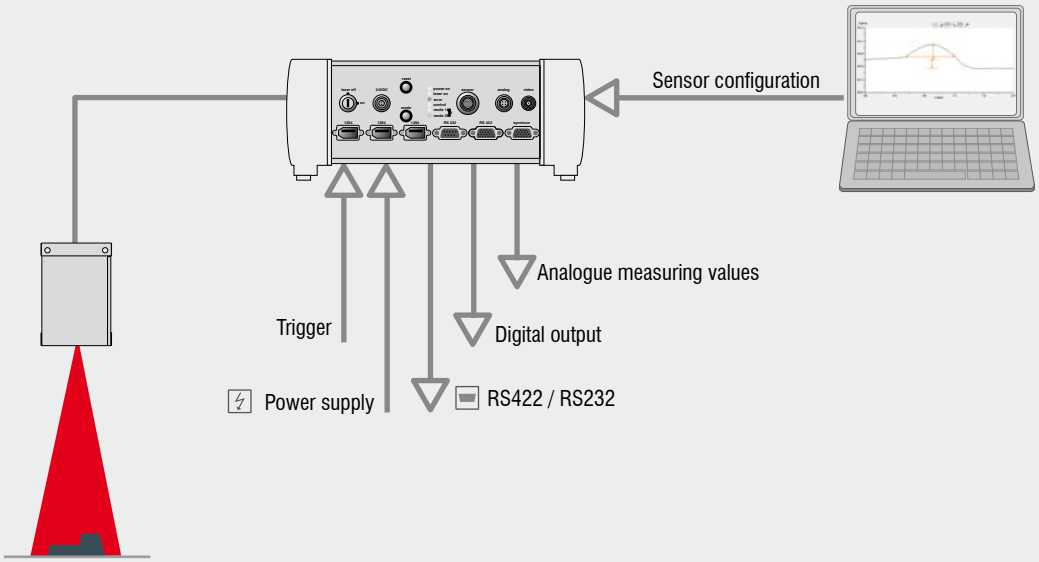

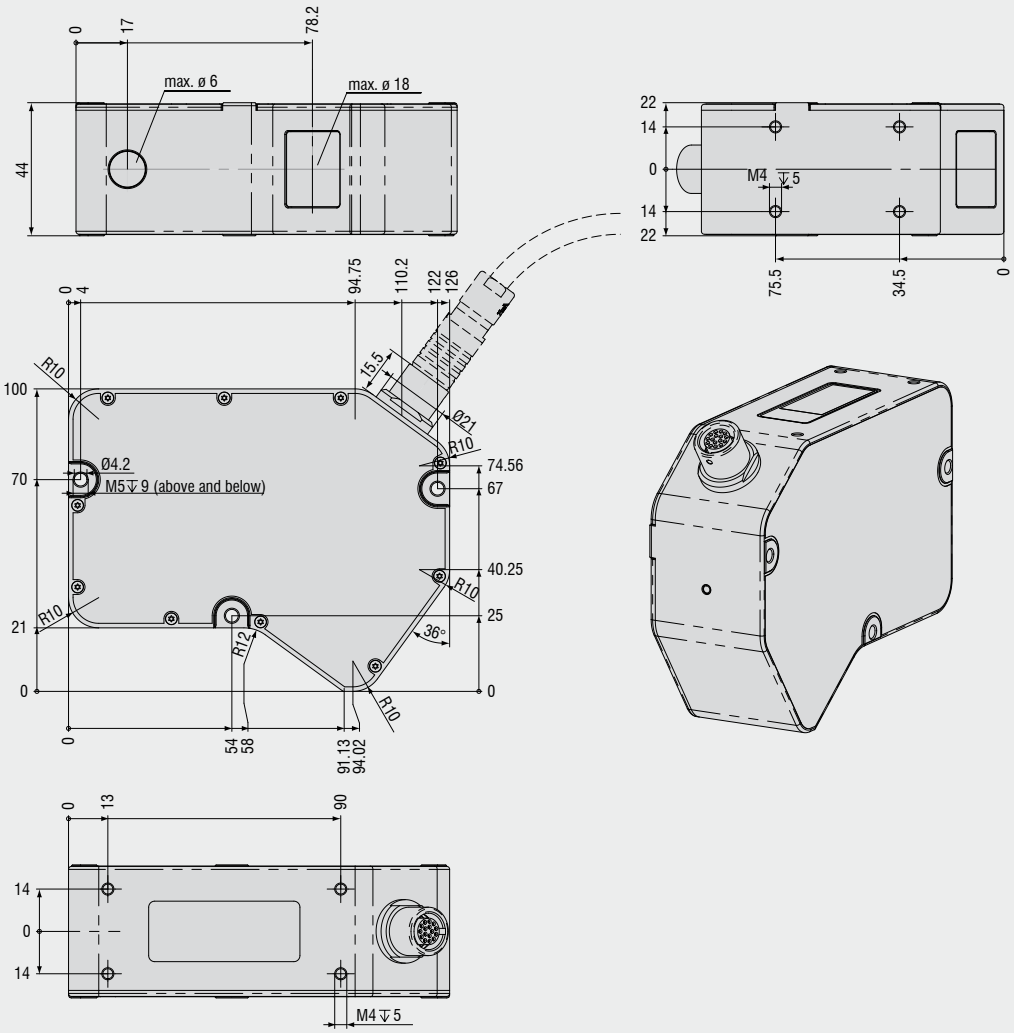
max. ø 6
max. ø 18
M4 ↧5
Ø4.2
M5↧9 (above and below)
R10
R12
Ø21
36°
M4↧5

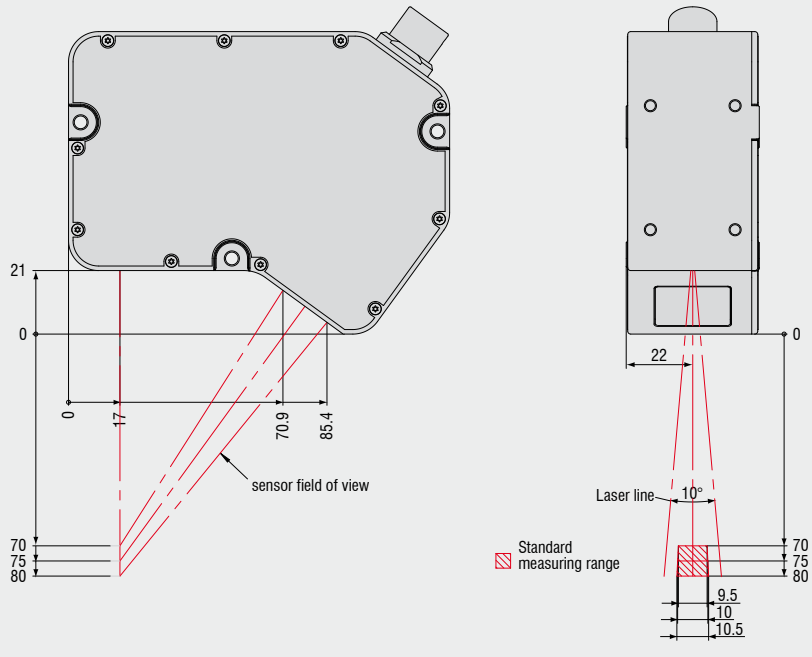
sensor field of view
Laser line
10°
Standard measuring range

			HIGHSPEED	*SMART*
	Model	scanCONTROL	2800-10	2810-10
z-axis (height)	Standard measuring range 10mm	Start of measuring range	70mm	
		Midrange	75mm	
		End of measuring range	80mm	
	Linearity [1]	±0.3% FSO (3sigma)	±30µm	
	Resolution	0.04% FSO	4µm	
	Reference resolution [2] [3]		2µm	
x-axis (width)	Standard measuring range	Start of measuring range	9.5mm	
		Midrange	10mm	
		End of measuring range	10.5mm	
	Resolution x-axis		1,024 points/profile	
	Profile frequency		4,000 Hz	
	Measurement rate		256,000 points/sec	
	Interfaces profile data	FireWire	■	■
		RS232	■	■
		RS422	■	■
		Trigger HTL/TTL	■	■
		Counter (encoder)	■	■
	Signal output SMART	RS232		■
		RS422		■
		Analogue		■
		Switching signal		■
	Display (LED)		1x laser, 1x power/error/control, 2x mode	
	Protection class	Sensor	IP 64	
		Controller	IP 40	
	Operating temperature		0°C up to 50°C	
	Storage temperature		-20°C up to 70°C	
	Cable length		up to 10m	
	Weight	Sensor	appr. 560g	
		Controller	appr. 3.5kg	
	Galvanic isolation		All interfaces are galvanically isolated	
	Vibration		2g / 20 ... 500Hz	
	Shock		15g / 6ms	
	Supply		20-27 VDC, 500mA	
	Light source		Semiconductor laser 655nm	
	Aperture angle laser line		10°	
	Laser power		7mW (class 2M)	
	Laser off		via software and external contact	
	Permissible ambient light (fluorescent light) [2]		10,000lx	

[1] Standard measuring range
[2] Measuring object: Micro-Epsilon standard object (metallic, diffusely reflecting material)
[3] According to a one-time averaging across the measuring field (1024 points)
FSO = Full scale output

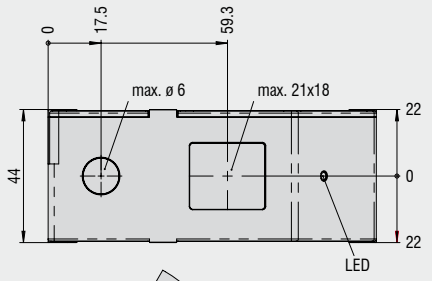
0
17.5
59.3
max. ø 6
max. 21x18
22
44
0
22
LED

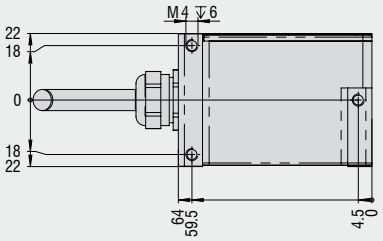
M4 ↧6
22
18
0
18
22
64
59.5
4.5
0

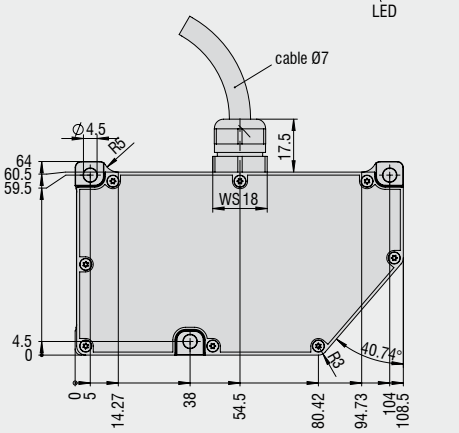
cable Ø7
Ø4.5
15
17.5
64
60.5
59.5
WS18
4.5
0
R3
40.74°
0
5
14.27
38
54.5
80.42
94.73
104
108.5

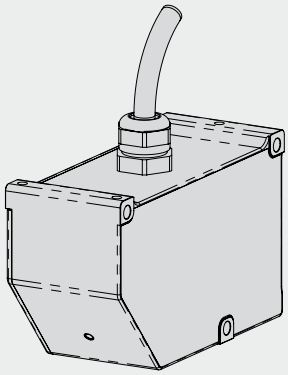

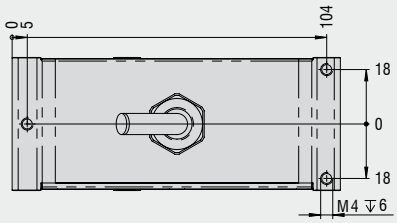
0
5
104
18
0
18
M4 ↧6

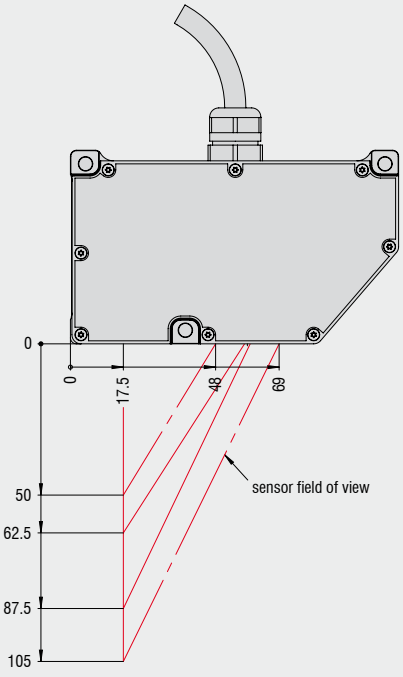
0
0
17.5
48
69
sensor field of view
50
62.5
87.5
105

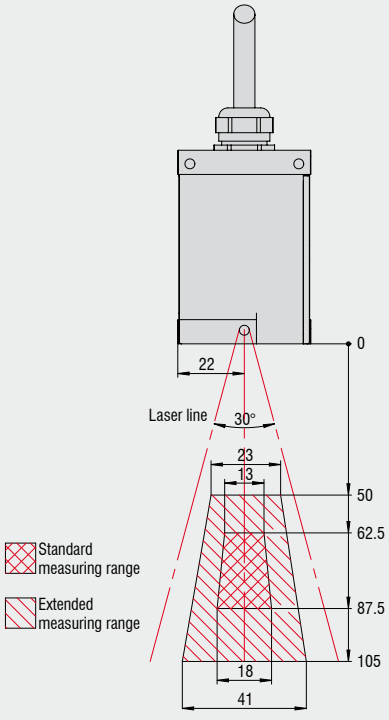
0
22
Laser line
30°
23
13
Standard measuring range
Extended measuring range
50
62.5
87.5
105
18
41

			HIGHSPEED	*SMART*
	Model	scanCONTROL	2800-25	2810-25
z-axis (height)	Standard measuring range 25mm	Start of measuring range	62.5mm	
		Midrange	75mm	
		End of measuring range	87.5mm	
	Extended measuring range 55mm	Start of measuring range	50mm	
		Midrange	82.5mm	
		End of measuring range	105mm	
	Linearity [1]	±0.2% FSO (3sigma)	±50µm	
	Resolution	0.04% FSO	10µm	
	Reference resolution [2] [3]		4µm	
x-axis (width)	Standard measuring range	Start of measuring range	13mm	
		End of measuring range	18mm	
	Extended measuring range	Start of measuring range	23mm	
		End of measuring range	41mm	
	Resolution x-axis		1,024 points/profile	
	Profile frequency		4,000Hz	
	Measurement rate		256,000 points/sec	
	Interfaces profile data	FireWire	■	■
		RS232	■	■
		RS422	■	■
		Trigger HTL/TTL	■	■
		Counter (encoder)	■	■
	Signal output SMART	RS232		■
		RS422		■
		Analogue		■
		Switching signal		■
	Display (LED)		1x laser, 1x power/error/control, 2x mode	
	Protection class	Sensor	IP 64	
		Controller	IP 40	
	Operating temperature		0°C up to 50°C	
	Storage temperature		-20°C up to 70°C	
	Cable length		up to 10m	
	Weight	Sensor	appr. 350g	
		Controller	appr. 3.5kg	
	Galvanic isolation		All interfaces are galvanically isolated	
	Vibration		2g / 20 ... 500Hz	
	Shock		15g / 6ms	
	Supply		20-27 VDC, 500mA	
	Light source		Semiconductor laser 655nm	
	Aperture angle laser line		30°	
	Laser power	standard	15mW (class 2M)	
		optional	50mW (class 3B)	
	Laser off		via software and external contact	
	Permissible ambient light (fluorescent light) [2]		10,000lx	

[1] Standard measuring range
[2] Measuring object: Micro-Epsilon standard object (metallic, diffusely reflecting material)
[3] According to a one-time averaging across the measuring field (1024 points)
FSO = Full scale output

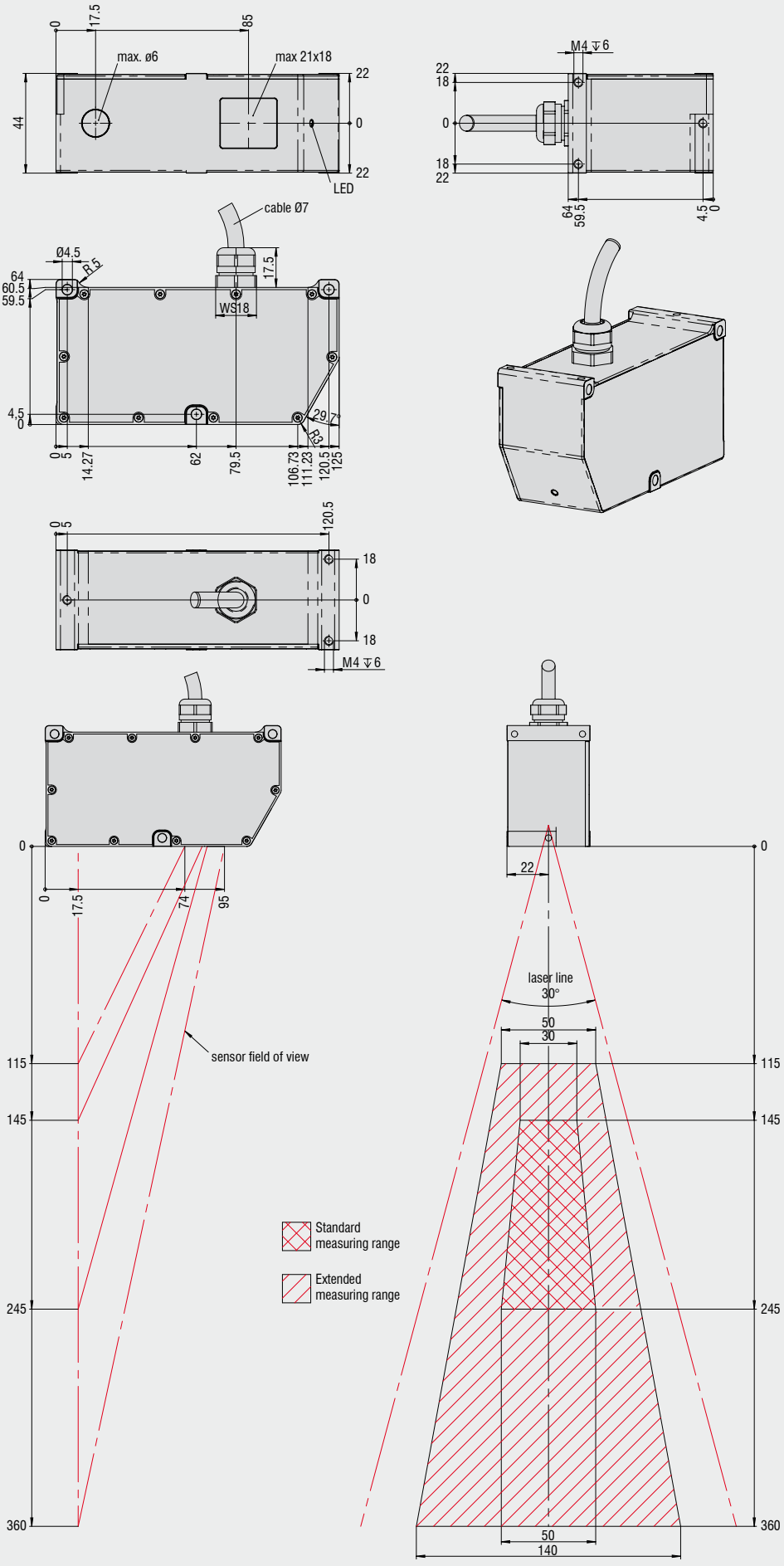
max. ø6
max 21x18
LED
M4 ↧6
cable Ø7
Ø4.5
WS18
sensor field of view
laser line
30°
Standard
measuring range
Extended
measuring range

	Model	scanCONTROL	*HIGHSPEED* 2800-100	*SMART* 2810-100
z-axis (height)	Standard measuring range 100mm	Start of measuring range	145mm	
		Midrange	195mm	
		End of measuring range	245mm	
	Extended measuring range 245mm	Start of measuring range	115mm	
		Midrange	235mm	
		End of measuring range	360mm	
	Linearity [1]	±0.2% FSO (3sigma)	±200µm	
	Resolution	0.04% FSO	40µm	
	Reference resolution [2] [3]		10µm	
x-axis (width)	Standard measuring range	Start of measuring range	30mm	
		End of measuring range	50mm	
	Extended measuring range	Start of measuring range	50mm	
		End of measuring range	140mm	
	Resolution x-axis		1,024 points/profile	
	Profile frequency		4,000Hz	
	Measurement rate		256,000 points/sec	
	Interfaces profile data	FireWire	■	■
		RS232	■	■
		RS422	■	■
		Trigger HTL/TTL	■	■
		Counter (encoder)	■	■
	Signal output SMART	RS232		■
		RS422		■
		Analogue		■
		Switching signal		■
	Display (LED)		1x laser, 1x power/error/control, 2x mode	
	Protection class	Sensor	IP 64	
		Controller	IP 40	
	Operating temperature		0°C up to 50°C	
	Storage temperature		-20°C up to 70°C	
	Cable length		up to 10m	
	Weight	Sensor	appr. 400g	
		Controller	appr. 3.5kg	
	Galvanic isolation		All interfaces are galvanically isolated	
	Vibration		2g / 20 ... 500Hz	
	Shock		15g / 6ms	
	Supply		20-27 VDC, 500mA	
	Light source		Semiconductor laser 655nm	
	Aperture angle laser line		30°	
	Laser power	standard	15mW (class 2M)	
		optional	50mW (class 3B)	
	Laser off		via software and external contact	
	Permissible ambient light (fluorescent light) [2]		10,000lx	

[1] Standard measuring range
[2] Measuring object: Micro-Epsilon standard object (metallic, diffusely reflecting material)
[3] According to a one-time averaging across the measuring field (1024 points)
FSO = Full scale output

Cables and accessories

Connecting cables, qualified for drag chain use

Part.-No.	*Model*	*Description*
2901146	CE2800-3-SB	Extension cable for sensor, 3m (female-male)
2901146.01	CE2800-3-SS	Connection cable for sensor, 3m (male-male)
2901219	CE2800-5-SB	Extension cable for sensor, 5m (female-male)
2901219.01	CE2800-5-SS	Connection cable for sensor, 4.75m (male-male)
2901147	CE2800-8-SB	Extension cable for sensor, 8m (female-male)
2901228	CE2800-8-SS	Connection cable for sensor, 7.75m (male-male)
2901167	CE2800-10-SS	Connection cable for sensor, 9.75m (male-male)

Connecting cables, qualified for robotic use

Part.-No.	*Model*	*Description*
2901202	CER2800-5-SS	Connection cable for sensor, 4.75m (male-male)
2901222	CER2800-8-SB	Extension cable for sensor, 8m (female-male)
2901229	CER2800-8-SS	Connection cable for sensor, 7.75m (male-male)
2901164	CER2800-10-SS	Connection cable for sensor, 9.75m (male-male)

Other cables

Part.-No.	*Model*	*Description*
2901145	PC2800-3	Power supply cable, 3m
2901159	SCD-IEEE-1394-3	FireWire cable, 3m
2901150	SC2800-0,5	Synchronisation cable, 0.5m suitable for controller LLT2800 and LLT2810

Accessories

Part.-No.	*Model*	*Description*
2420062	PS2020	Power supply 24 V/2.5A
8360006	3D-View	scanCONTROL 3D-View software

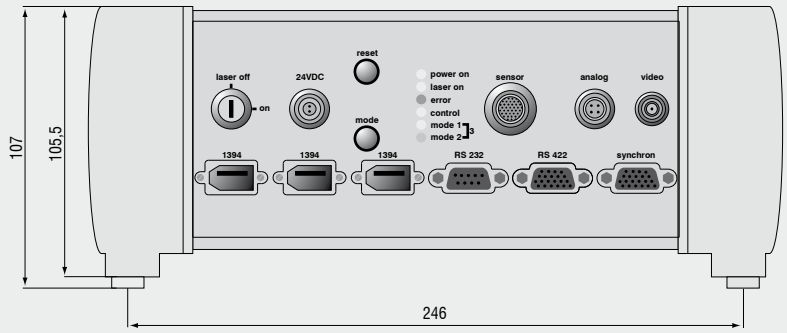
reset
laser off
on
24VDC
mode
power on
laser on
error
control
mode 1
mode 2
sensor
analog
video
1394
1394
1394
RS 232
RS 422
synchron
107
105,5
246

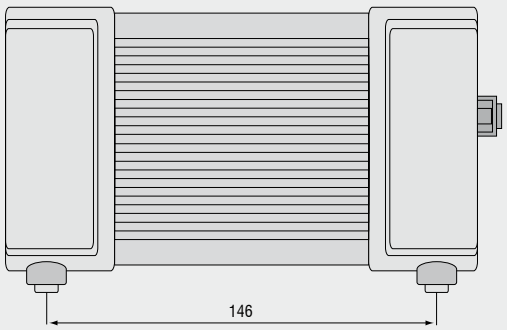
146

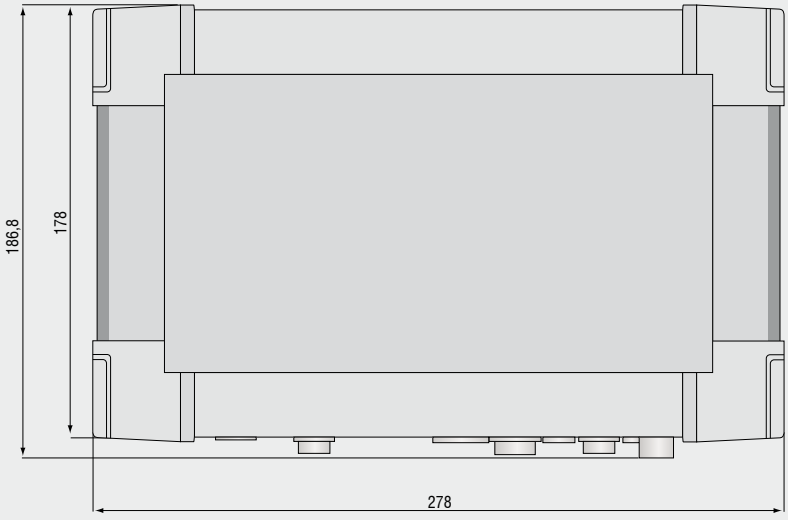
186,8
178
278

High performance sensors made by Micro-Epsilon

Sensors and systems for displacement and position

Sensors and measurement devices for non-contact temperature measurement

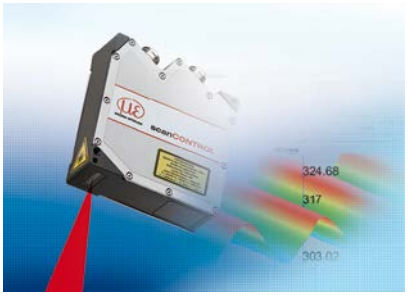

2D/3D profile sensors (laser scanner)

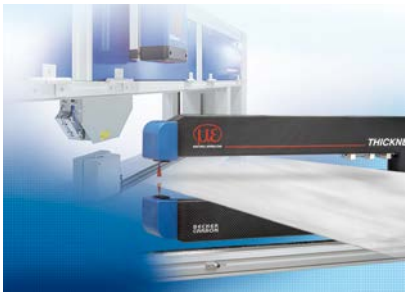

Measurement and inspection systems for quality assurance

Optical micrometers, fibre optic sensors and fibre optics

Colour recognition sensors, LED analyzers and colour online spectrometer

Modifications reserved / Y9761353-B011033MLO

MICRO-EPSILON

MICRO-EPSILON Headquarters
Koenigbacher Str. 15 · 94496 Ortenburg / Germany
Tel. +49 (0) 8542 / 168-0 · Fax +49 (0) 8542 / 168-90
info@micro-epsilon.com · www.micro-epsilon.com

MICRO-EPSILON UK Ltd.
No.1 Shorelines Building · Shore Road · Birkenhead · CH41 1AU
Phone +44 (0) 151 355 6070 · Fax +44 (0) 151 355 6075
info@micro-epsilon.co.uk · www.micro-epsilon.co.uk