Model	Weight gm	Sensitivity mV/g	Range g	Frequency Response Hz (±5%)	Electrical Isolation	Max. Shock gpk	Min. Temp. °F (°C)	Max Temp. °F (°C)	Environmental Seal	Mounting Method
3006A	12	100	50	0.32 to 15,000 (±1dB)	yes	3,000	-60 (-51)	+250 (+121)	hermetic	10-32 tapped hole
3019A	8	10	500	1 to 10,000	yes	3,000	-60 (-51)	+300 (+149)	hermetic	1/4-28 stud
3019A1	8	10	500	1 to 10,000	yes	3,000	-60 (-51)	+300 (+149)	hermetic	10-32 stud
3023A1[3]	4	10	500	1.5 to 5,000 (+15/-5%)	no	5,000	-60 (-51)	+250 (+121)	hermetic	5-40 tapped hole
3023A2[3]	4	10	500	1.5 to 5,000 (+15/-5%)	no	5,000	-60 (-51)	+250 (+121)	hermetic	10-32 tapped hole
3023A2H[3]	4	10	500	1.5 to 5,000 (+15/-5%)	no	5,000	-60 (-51)	+320 (+160)	hermetic	10-32 tapped hole
3023A[3]	3	10	500	1.5 to 10,000 (+15/-5%)	no	5,000	-60 (-51)	+250 (+121)	hermetic	adhesive
3023A3[3]	3	5	1,000	1.5 to 10,000 (+15/-5%)	no	5,000	-60 (-51)	+250 (+121)	hermetic	adhesive
3023A4[3]	4	5	1,000	1.5 to 5,000 (+15/-5%)	no	5,000	-60 (-51)	+250 (+121)	hermetic	5-40 tapped hole
3023A5[3]	3	1	5,000	1.5 to 10,000 (+15/-5%)	no	7,000	-60 (-51)	+250 (+121)	hermetic	adhesive
3023A6[3]	4	5	1,000	1.5 to 5,000 (+15/-5%)	no	5,000	-60 (-51)	+250 (+121)	hermetic	10-32 tapped hole
3023A9[3]	1	1	5,000	0.55 to 5,000 (+15/-5%)	no	5,000	-60 (-51)	+250 (+121)	hermetic	10-32 tapped hole
3023AH[3]	3	10	500	1.5 to 10,000 (+15/-5%)	no	5,000	-60 (-51)	+320 (+160)	hermetic	adhesive
3030B4	6.8	10	500	2 to 10,000	no	3,000	-60 (-51)	+250 (+121)	hermetic	10-32 stud
3030B5	6.8	10	500	5 to 10,000	no	3,000	-60 (-51)	+250 (+121)	hermetic	10-32 stud
3030B5H	6.8	10	500	5 to 10,000	no	3,000	-60 (-51)	+325 (+162)	hermetic	10-32 stud
3032A	1.5	10	500	1 to 10,000 (±10%)	no	1,500	-60 (-51)	+250 (+121)	epoxy	adhesive
3032A1	1.5	5	1,000	1 to 10,000 (±10%)	no	2,000	-60 (-51)	+250 (+121)	epoxy	adhesive
3033B2[3]	11	10	500	1 to 8,000 (±10%)	no	1,000	-60 (-51)	+250 (+121)	epoxy	thru hole
3035B	2.5	100	50	0.5 to 5,000	no	3,000	-60 (-51)	+225 (+107)	hermetic	5-40 stud
3035B1	2.5	10	500	0.5 to 5,000	no	3,000	-60 (-51)	+225 (+107)	hermetic	5-40 stud
3035B1G	2.5	10	500	0.5 to 10,000	no	3,000	-60 (-51)	+225 (+107)	hermetic	adhesive
3035B2	2.5	50	100	0.5 to 5,000	no	3,000	-60 (-51)	+225 (+107)	hermetic	5-40 stud
3035B2G	2.5	50	100	0.5 to 10,000	no	3,000	-60 (-51)	+225 (+107)	hermetic	adhesive
3035BG	2.5	100	50	0.5 to 10,000	no	3,000	-60 (-51)	+225 (+107)	hermetic	adhesive
3045A	20	5	1,000	4.8 to 1,800	yes	2,000	-420 (-251)	+300 (+149)	hermetic	1/4-28 stud
3049E	3.3	10	500	1 to 10,000	yes	5,000	-60 (-51)	+250 (+121)	hermetic	10-32 stud
3049E1	3.1	10	500	1 to 10,000	yes	5,000	-60 (-51)	+250 (+121)	hermetic	adhesive
3049E2	3.3	100	50	1 to 10,000	yes	5,000	-60 (-51)	+212 (+100)	hermetic	10-32 stud
3049E3	3.1	100	50	1 to 10,000	yes	5,000	-60 (-51)	+212 (+100)	hermetic	adhesive
3053B1[3]	5.5	5	1,000	2 to 5,000 (±10%)	yes	5,000	-60 (-51)	+250 (+121)	hermetic	adhesive
3053B2[3]	7.5	10	500	2 to 5,000 (±10%)	yes	5,000	-60 (-51)	+250 (+121)	hermetic	10-32 tapped hole
3053B[3]	6	10	500	2 to 5,000 (±10%)	yes	5,000	-60 (-51)	+250 (+121)	hermetic	adhesive
3055B1	10	10	500	1 to 10,000	yes	3,000	-60 (-51)	+250 (+121)	hermetic	10-32 tapped hole
3055B2	10	100	50	1 to 10,000	yes	2,000	-60 (-51)	+250 (+121)	hermetic	10-32 tapped hole
3055B[3]	10	500	10	1 to 10,000	yes	1,000	-60 (-51)	+225 (+107)	hermetic	10-32 tapped hole
3055B4	10	50	100	1 to 10,000	yes	2,000	-60 (-51)	+250 (+121)	hermetic	10-32 tapped hole
3055B6	10	200	25	1 to 10,000	yes	2,000	-60 (-51)	+225 (+107)	hermetic	10-32 tapped hole
3056B1	10	10	500	1 to 10,000	yes	3,000	-60 (-51)	+250 (+121)	hermetic	10-32 tapped hole
3056B2	10	100	50	1 to 10,000	yes	2,000	-60 (-51)	+250 (+121)	hermetic	10-32 tapped hole
3056B3	10	500	10	1 to 10,000	yes	1,000	-60 (-51)	+225 (+107)	hermetic	10-32 tapped hole
3056B4	10	20	250	1 to 10,000	yes	3,000	-60 (-51)	+250 (+121)	hermetic	10-32 tapped hole
3056B5	10	50	100	1 to 10,000	yes	3,000	-60 (-51)	+250 (+121)	hermetic	10-32 tapped hole
3056B6	10	200	25	1 to 10,000	yes	2,000	-60 (-51)	+225 (+107)	hermetic	10-32 tapped hole
3056B7	10	5	1,000	1 to 10,000	yes	3,000	-60 (-51)	+250 (+121)	hermetic	10-32 tapped hole
3062A	37	10	500	0.48 - 10,000	yes	5,000	-60 (-51)	+305 (+152)	hermetic	1/4-28 stud
3062A1	40	25	200	0.48 - 10,000	yes	3,000	-60 (-51)	+305 (+152)	hermetic	1/4-28 stud
3063B[3]	113	100	50	0.5 to 3,000	yes	2,000	-65 (-54)	+250 (+121)	hermetic	1/4-28 thru hole
3077A	11	10	500	1.5 - 5,000	yes	3,000	-60 (-51)	+250 (+121)	hermetic	Ø.312 thru hole
3078A	20	10	500	1.5 to 5,000 (±10%)	yes	3,000	-60 (-51)	+250 (+121)	hermetic	Ø.312 thru hole
3079A	11	10	500	1.5 to 5,000 (±10%)	yes	3,000	-60 (-51)	+250 (+121)	hermetic	Ø.257 thru hole

[1] = *IEEE 1451.4 TEDS*, [2] = *Biaxial*, [3] = *Triaxial*

Model	Weight gm	Sensitivity mV/g	Range g	Frequency Response Hz (±5%)	Electrical Isolation	Max. Shock gpk	Min. Temp. °F (°C)	Max Temp. °F (°C)	Environmental Seal	Mounting Method
3086A1	3.5	0.05	70,000	0.35 to 10,000 (±10%)	yes	100,000	-60 (-51)	+250 (+121)	hermetic	1/4-28 stud
3086A2	3.5	0.1	50,000	0.35 to 10,000 (±10%)	yes	100,000	-60 (-51)	+250 (+121)	hermetic	1/4-28 stud
3086A3	3.5	0.25	20,000	0.35 to 10,000 (±10%)	yes	100,000	-60 (-51)	+250 (+121)	hermetic	1/4-28 stud
3086A4	3.5	0.5	10,000	0.35 to 10,000 (±10%)	yes	20,000	-60 (-51)	+250 (+121)	hermetic	1/4-28 stud
3086A5	3.5	1	5,000	0.35 to 10,000 (±10%)	yes	20,000	-60 (-51)	+250 (+121)	hermetic	1/4-28 stud
3086A6	3.5	2	2,500	0.35 to 10,000 (±10%)	yes	20,000	-60 (-51)	+250 (+121)	hermetic	1/4-28 stud
3089A	0.6	10	500	1 to 10,000 (±10%)	no	3,000	-60 (-51)	+250 (+121)	hermetic	adhesive
3091A	25	10	500	10 to 1,000	yes	3,000	-60 (-51)	+250 (+121)	hermetic	Ø.312 thru hole
3093B1[3]	13.5	100	50	2 to 5,000 (±10%)	yes	3,000	-60 (-51)	+250 (+121)	hermetic	10-32 stud
3093B[3]	10	100	50	0.6 to 5,000 (±10%)	yes	500	-60 (-51)	+250 (+121)	hermetic	adhesive
3097A1	4.3	10	500	0.3 to 10,000	no	5,000	-60 (-51)	+200 (+93)	hermetic	5-40 tapped hole
3097A2	4.3	100	50	0.3 to 10,000	no	5,000	-60 (-51)	+180 (+82)	hermetic	5-40 tapped hole
3097A3	4.3	500	10	0.3 to 10,000	no	5,000	-60 (-51)	+150 (+65)	hermetic	5-40 tapped hole
3100D24	55	1,000	5	1 to 1,000	yes	1,000	-60 (-51)	+250 (+121)	hermetic	10-32 tapped hole
3120B	85	10	500	10 to 10,000 (±2%)	no	2,000	-60 (-51)	+200 (+93)	hermetic	10-32 tapped hole
3123A	120	100	50	10 to 5,000 (±2%)	no	2,000	-60 (-51)	+250 (+121)	epoxy	10-32 tapped hole
3133A1[3]	0.8	10	500	0.25 to 7,000 (±10%)	no	3,000	-60 (-51)	+250 (+121)	epoxy	adhesive
3133A2[3]	0.8	2	2,500	0.7 to 7,000 (±10%)	no	3,000	-60 (-51)	+300 (+149)	epoxy	adhesive
3133A3[3]	0.8	5	1,000	0.25 to 7,000 (±10%)	no	3,000	-60 (-51)	+300 (+149)	epoxy	adhesive
3143D1[3]	14	100	50	0.5 to 3,000	yes	1,500	-60 (-51)	+185 (+85)	hermetic	thru hole
3143D2[3]	14	50	100	0.5 to 3,000	yes	1,500	-60 (-51)	+185 (+85)	hermetic	thru hole
3143D[3]	14	10	500	0.5 to 3,000	yes	1,500	-60 (-51)	+185 (+85)	hermetic	thru hole
3145A	2.3	100	50	0.5 to 10,000	no	3,000	-60 (-51)	+225 (+107)	hermetic	5-40 stud
3145A1	2.3	10	500	0.5 to 10,000	no	3,000	-60 (-51)	+250 (+121)	hermetic	5-40 stud
3145A1G	2.1	10	500	0.5 to 10,000	no	3,000	-60 (-51)	+250 (+121)	hermetic	adhesive
3145A2	2.3	5	1,000	0.5 to 10,000	no	3,000	-60 (-51)	+250 (+121)	hermetic	5-40 stud
3145A2G	2.1	5	1,000	0.5 to 10,000	no	3,000	-60 (-51)	+250 (+121)	hermetic	adhesive
3145AG	2.1	100	50	0.5 to 10,000	no	3,000	-60 (-51)	+225 (+107)	hermetic	adhesive
3148E	48	100	50	0.5 to 5,000	yes	3,000	-60 (-51)	+250 (+121)	hermetic	10-32 tapped hole
3166B	228	100	50	0.5 to 5,000	yes	3,000	-60 (-51)	+250 (+121)	hermetic	1/4-28 thru hole
3166B1	228	500	10	0.5 to 1,000	yes	3,000	-60 (-51)	+250 (+121)	hermetic	1/4-28 thru hole
3166B2	228	10	500	0.5 to 5,000	yes	3,000	-60 (-51)	+250 (+121)	hermetic	1/4-28 thru hole
3168F	23	10	500	1 to 20,000	yes	3,000	-60 (-51)	+250 (+121)	hermetic	8-32 thru hole
3176B	44	100	50	0.3 to 10,000 (±10%)	yes	5,000	-60 (-51)	+250 (+121)	hermetic	10-32 tapped hole
3176B1	44	100	50	0.3 to 10,000 (±10%)	yes	5,000	-60 (-51)	+250 (+121)	hermetic	10-32 tapped hole
3184E	120	100	50	1 to 5,000	yes	3,000	-60 (-51)	+250 (+121)	hermetic	1/4-28 tapped hole
3185D	55	100	50	2 to 10,000 (±10%)	yes	3,000	-60 (-51)	+250 (+121)	hermetic	1/4-28 tapped hole
3187D	122	500	10	0.48 to 1,000	yes	3,000	-60 (-51)	+250 (+121)	hermetic	1/4-28 tapped hole
3191A	775	5,000	1	0.08 to 1,000	yes	100	-60 (-51)	+250 (+121)	hermetic	1/4-28 tapped hole
3191A1	775	10,000	0.5	0.08 to 1,000	yes	100	-60 (-51)	+250 (+121)	hermetic	1/4-28 tapped hole
3192A	190	1,000	5	0.5 to 1,000	yes	100	-60 (-51)	+250 (+121)	hermetic	1/4-28 tapped hole
3200B	6	0.05	70,000	0.35 to 10,000 (±10%)	yes	100,000	-60 (-51)	+250 (+121)	epoxy	1/4-28 stud
3200B2	6	0.1	50,000	0.35 to 10,000 (±10%)	yes	100,000	-60 (-51)	+250 (+121)	epoxy	1/4-28 stud
3200B3	6	0.25	20,000	0.35 to 10,000 (±10%)	yes	100,000	-60 (-51)	+250 (+121)	epoxy	1/4-28 stud
3200B4	6	0.5	10,000	0.35 to 10,000 (±10%)	yes	50,000	-60 (-51)	+250 (+121)	epoxy	1/4-28 stud
3200B5	6	1	5,000	0.35 to 10,000 (±10%)	yes	50,000	-60 (-51)	+250 (+121)	epoxy	1/4-28 stud
3200B6	6	2	2,500	0.35 to 10,000 (±10%)	yes	50,000	-60 (-51)	+250 (+121)	epoxy	1/4-28 stud
3202A	160	100	50	0.5 to 5,000	yes	3,000	-60 (-51)	+250 (+121)	hermetic	1/4-28 thru hole
3202A1	160	500	10	0.5 to 5,000	yes	1,500	-60 (-51)	+250 (+121)	hermetic	1/4-28 thru hole
3202A2	180	100	50	0.5 to 5,000	yes	1,500	-60 (-51)	+250 (+121)	hermetic	1/4-28 thru hole
3202A3	180	500	10	0.5 to 5,000	yes	1,500	-60 (-51)	+250 (+121)	hermetic	1/4-28 thru hole

[1] = *IEEE 1451.4 TEDS,* [2] = *Biaxial,* [3] = *Triaxial*

Model	Weight gm	Sensitivity mV/g	Range g	Frequency Response Hz (±5%)	Electrical Isolation	Max. Shock gpk	Min. Temp. °F (°C)	Max Temp. °F (°C)	Environmental Seal	Mounting Method
3211A1	10	10	500	1 to 10,000	yes	5,000	-60 (-51)	+250 (+121)	hermetic	Ø.171 thru hole
3211A2	10	100	40	1 to 10,000	yes	5,000	-60 (-51)	+250 (+121)	hermetic	Ø.171 thru hole
3211M1	10	50	500	10 to 10,000	yes	5,000	-60 (-51)	+250 (+121)	hermetic	thru hole
3213M6[3]	58	100	50	1.5 to 5,000	yes	5,000	-40 (-40)	+200 (+93)	hermetic	1/4-28 thru hole
3214A1	11	10	500	1 to 10,000	no	5,000	-60 (-51)	+250 (+121)	hermetic	10-32 tapped hole
3214A2	11	100	50	1 to 10,000	no	5,000	-60 (-51)	+225 (+107)	hermetic	10-32 tapped hole
3214A3	11	500	10	1 to 10,000	no	5,000	-60 (-51)	+180 (+82)	hermetic	10-32 tapped hole
3215M1	10	10	500	1 to 20,000	yes	5,000	-60 (-51)	+300 (+149)	hermetic	Ø.190 thru hole
3217A	5	100	50	1 to 10,000 (±10%)	yes	5,000	-60 (-51)	+250 (+121)	hermetic	adhesive
3220E	2.7	10	500	1 to 5,000	yes	2,000	-60 (-51)	+250 (+121)	hermetic	Ø.093 thru hole
3220M6	5.5	10	500	2 to 5,000	yes	2,000	-65 (-54)	+250 (+121)	hermetic	adhesive
3224A1	0.2	10	500	0.25 to 7,000 (±10%)	no	3,000	-60 (-51)	+300 (+149)	epoxy	adhesive
3224A2	0.2	2	2,500	0.7 to 7,000 (±10%)	no	5,000	-60 (-51)	+300 (+149)	epoxy	adhesive
3224A3	0.2	5	1,000	0.25 to 7,000 (±10%)	no	2,000	-60 (-51)	+300 (+149)	epoxy	adhesive
3225F	0.6	10	500	1.6 to 10,000 (±10%)	no	5,000	-60 (-51)	+250 (+121)	epoxy	adhesive
3225F1	0.6	10	500	1.6 to 10,000 (±10%)	no	5,000	-60 (-51)	+250 (+121)	hermetic	adhesive
3225F2	1	10	500	1.6 to 10,000 (±10%)	yes	5,000	-60 (-51)	+250 (+121)	hermetic	adhesive
3225F3	0.6	10	500	1.6 to 10,000 (±10%)	yes	5,000	-60 (-51)	+250 (+121)	hermetic	adhesive
3225M23	1	50	100	2 to 10,000 (±10%)	no	5,000	-60 (-51)	+220 (+104)	hermetic	adhesive
3225M24	1	100	50	2 to 10,000 (±10%)	no	5,000	-60 (-51)	+220 (+104)	hermetic	adhesive
3232A1[2]	45	10	500	3.3 to 2,500 (±10%)	yes	5,000	-60 (-51)	+250 (+121)	hermetic	Ø.268 thru hole
3232A2[2]	45	100	50	3.3 to 2,500 (±10%)	yes	5,000	-60 (-51)	+250 (+121)	hermetic	Ø.268 thru hole
3233A[3]	28	1,000	5	0.4 to 6,000 (±10%)	yes	5,000	-60 (-51)	+200 (+93)	hermetic	thru hole
3237A2	37	25	200	0.48 to 10,000	yes	3,000	-60 (-51)	+305 (+152)	hermetic	1/4-28 stud
3243A[3]	2.5	10	500	1.5 to 10,000	yes	5,000	-60 (-51)	+250 (+121)	hermetic	adhesive
3255A1	10	10	500	1 to 10,000	no	3,000	-60 (-51)	+250 (+121)	hermetic	10-32 tapped hole
3255A2	10	100	50	1 to 10,000	no	2,000	-60 (-51)	+250 (+121)	hermetic	10-32 tapped hole
3255A3	10	500	10	1 to 10,000	no	1,000	-60 (-51)	+225 (+107)	hermetic	10-32 tapped hole
3255A4	10	50	100	1 to 10,000	no	2,000	-60 (-51)	+250 (+121)	hermetic	10-32 tapped hole
3255A6	10	200	25	1 to 10,000	no	2,000	-60 (-51)	+225 (+107)	hermetic	10-32 tapped hole
3256A1	10	10	500	1 to 10,000	no	3,000	-60 (-51)	+250 (+121)	hermetic	10-32 tapped hole
3256A2	10	100	50	1 to 10,000	no	2,000	-60 (-51)	+250 (+121)	hermetic	10-32 tapped hole
3256A3	10	500	10	1 to 10,000	no	1,000	-60 (-51)	+225 (+107)	hermetic	10-32 tapped hole
3256A4	10	20	250	1 to 10,000	no	3,000	-60 (-51)	+250 (+121)	hermetic	10-32 tapped hole
3256A5	10	50	100	1 to 10,000	no	3,000	-60 (-51)	+250 (+121)	hermetic	10-32 tapped hole
3256A6	10	200	25	1 to 10,000	no	2,000	-60 (-51)	+225 (+107)	hermetic	10-32 tapped hole
3263A1T[1,3]	5.6	10	500	1.5 to 10,000 (±10%)	no	5,000	-60 (-51)	+180 (+82)	hermetic	4-40 tapped hole
3263A2T[1,3]	5.6	100	50	1.5 to 10,000 (±10%)	no	5,000	-60 (-51)	+180 (+82)	hermetic	4-40 tapped hole
3263A3T[1,3]	5.6	50	100	1.5 to 10,000 (±10%)	no	5,000	-60 (-51)	+180 (+82)	hermetic	4-40 tapped hole
3273A1[3]	2.7	10	500	0.5 to 3,000	no	5,000	-60 (-51)	+250 (+121)	hermetic	adhesive
3273A2[3]	2.7	100	50	0.7 to 3,000	no	5,000	-60 (-51)	+165 (+74)	hermetic	adhesive
3273A4[3]	2.7	50	100	0.5 to 3,000	no	5,000	-60 (-51)	+200 (+93)	hermetic	adhesive
3293A[3]	8.8	500	7	0.25 to 4,000 (±10%)	no	1,000	-60 (-51)	+185 (+85)	hermetic	5-40 tapped hole
3302A2[2]	30	10	500	10 to 1,000	yes	3,000	-60 (-51)	+250 (+121)	hermetic	Ø.312 thru hole
3305A1	3.7	10	500	0.3 to 5,000	no	5,000	-60 (-51)	+220 (+104)	hermetic	adhesive
3305A2	3.7	100	50	0.3 to 5,000	yes	5,000	-60 (-51)	+180 (+82)	hermetic	adhesive
3305A3	3.7	500	10	0.3 to 5,000	yes	5,000	-60 (-51)	+150 (+66)	hermetic	adhesive
3311A	3.3	50	100	2 to 10,000 (±10%)	yes	3,000	-60 (-51)	+320 (+160)	hermetic	Ø.093 thru hole

[1] = *IEEE 1451.4 TEDS*, [2] = *Biaxial*, [3] = *Triaxial*

PRODUCT SELECTION GUIDE — IEPE ACCELEROMETERS

Model	Weight gm	Sensitivity mV/g	Range g	Frequency Response Hz (±5%)	Electrical Isolation	Max. Shock gpk	Min. Temp. °F (°C)	Max Temp. °F (°C)	Environmental Seal	Mounting Method
3333A1[3]	2.3	10	500	0.31 to 10,000 (±10%)	no	5,000	-60 (-51)	+200 (+93)	hermetic	adhesive
3333A2[3]	2.3	100	50	0.31 to 10,000 (±10%)	no	5,000	-60 (-51)	+165 (+74)	hermetic	adhesive
3333A3[3]	2.3	50	100	0.31 to 10,000 (±10%)	no	5,000	-60 (-51)	+250 (+121)	hermetic	adhesive
3343A2[3]	2.4	2	2,500	1.2 to 5,000 (-5/15%)	no	5,000	-60 (-51)	+250 (+121)	hermetic	adhesive
3343A[3]	2.4	10	500	1.2 to 5,000 (-5/15%)	no	5,000	-60 (-51)	+250 (+121)	hermetic	adhesive
3343A3[3]	2.4	5	1,000	1.2 to 5,000 (-5/15%)	no	5,000	-60 (-51)	+250 (+121)	hermetic	adhesive
5313A[3]	227	100	50	0.5 to 3,000	no	1,500	-60 (-51)	+160 (+71)	hermetic	N/A
5334	150	10	500	4.8 to 600	yes	2,000	-65 (-54)	+900 (+482)	hermetic	Ø.171 thru hole, X3
5335	400	10	500	4.8 to 1,400	yes	2,000	-65 (-54)	+900 (+482)	hermetic	Ø.171 thru hole, X3

PRODUCT SELECTION GUIDE — CHARGE MODE ACCELEROMETERS

Model	Weight gm	Sensitivity pC/g	Upper Frequency Response Hz (+5%)	Electrical Isolation	Max. Shock gpk	Min. Temp. °F (°C)	Max Temp. °F (°C)	Environmental Seal	Mounting Method
3030C1	6.8	0.40	5,000	no	3,000	-100	+500 (+260)	hermetic	10-32 stud
3035C	2.5	2.5	10,000	no	3,000	-100	+400 (+204)	hermetic	5-40 stud
3035CG	2.3	2.5	10,000	no	3,000	-100	+400 (+204)	hermetic	adhesive
3049D	3.2	5.8	8,000	yes	2,000	-100	+350 (+177)	hermetic	10-32 stud
3049D1	3.0	5.8	8,000	yes	2,000	-100	+350 (+177)	hermetic	adhesive
3085C	75	1	2,500	yes	2,000	-65	+600 (+316)	hermetic	Ø.171 thru hole, X3
3088C	42	10	5,000	no	3,000	-65	+600 (+316)	hermetic	10-32 tapped hole
3092C	42	3.5	5,000 (+10%)	no	5,000	-60	+900 (+482)	hermetic	10-32 tapped hole
3122C2	25	15	5,000	no	2,000	-60	+500 (+260)	hermetic	10-32 tapped hole
3152C2	14	-4	5,000	no	3,000	-65	+500 (+260)	hermetic	10-32 tapped hole
3196C	85	8	2,500	no	2,000	-65	+500 (+260)	hermetic	Ø.171 thru hole, X3
3218C	157	1.6	10,000 (+10%)	yes	2,000	-60	+900 (+482)	hermetic	Ø.171 thru hole, X3
3220C	4	1	5,000	yes	2,000	-60	+500 (+260)	hermetic	Ø.093 thru hole
3221C	12.5	10	10,000 (+10%)	yes	5,000	-60	+500 (+260)	hermetic	Ø.140 thru hole
3221C2	12.5	5	10,000 (+10%)	yes	5,000	-60	+500 (+260)	hermetic	Ø.140 thru hole
3225E	0.5	1.8	10,000 (+10%)	no	5,000	-60	+350 (+177)	epoxy	adhesive
3225E1	0.6	1.8	10,000 (+10%)	no	5,000	-60	+350 (+177)	epoxy	adhesive
3225E2	0.7	1.8	10,000 (+10%)	no	5,000	-60	+350 (+177)	epoxy	adhesive
3225E3	0.6	1.8	10,000 (+10%)	no	5,000	-60	+350 (+177)	epoxy	adhesive
3235C1	55	50	10,000 (+15%)	yes	2,000	-60	+550 (+287)	hermetic	Ø.171 thru hole, X3
3235C2	55	100	10,000 (+15%)	yes	2,000	-60	+550 (+287)	hermetic	Ø.171 thru hole, X3
3235C3	55	200	10,000 (+15%)	yes	2,000	-60	+550 (+287)	hermetic	Ø.171 thru hole, X3
3255C	10	15	5,000 (+10%)	no	3,000	-60	+375 (+190)	hermetic	10-32 tapped hole
3256C	10	15	5,000 (+10%)	no	3,000	-60	+375 (+190)	hermetic	10-32 tapped hole
3309A	25.5	5	5,000	yes	10,000	-60	+500 (+260)	hermetic	Ø.171 thru hole
3310A	1.8	1.2	7,000	yes	5,000	-60	+500 (+260)	hermetic	adhesive
3316C	5	1	10,000	no	10,000	-60	+900 (+482)	hermetic	5-40 tapped hole
3323C[3]	50	10	5,000	no	3,000	-60	+500 (+260)	hermetic	Ø.19 tapped hole, X3

[1] = IEEE 1451.4 TEDS, [2] = Biaxial, [3] = Triaxial

Model	Weight gm	Sensitivity mV/g	Range g	Frequency Response Hz (3dB)	Max. Shock gpk	Min. Temp. °F (°C)	Max Temp. °F (°C)	Environmental Seal	Mounting Method
7500A1	13	1,000	2	0 to 400	5,000	-67 (-55)	+257 (+125)	hermetic	Ø.13 thru hole, X2
7500A2	13	400	5	0 to 600	5,000	-67 (-55)	+257 (+125)	hermetic	Ø.13 thru hole, X2
7500A3	13	200	10	0 to 1,000	5,000	-67 (-55)	+257 (+125)	hermetic	Ø.13 thru hole, X2
7500A4	13	80	25	0 to 1,500	5,000	-67 (-55)	+257 (+125)	hermetic	Ø.13 thru hole, X2
7500A5	13	40	50	0 to 2,000	5,000	-67 (-55)	+257 (+125)	hermetic	Ø.13 thru hole, X2
7500A6	13	20	100	0 to 2,500	5,000	-67 (-55)	+257 (+125)	hermetic	Ø.13 thru hole, X2
7500A7	13	10	200	0 to 2,500	5,000	-67 (-55)	+257 (+125)	hermetic	Ø.13 thru hole, X2
7500A8	13	5	400	0 to 2,500	5,000	-67 (-55)	+257 (+125)	hermetic	Ø.13 thru hole, X2
7500M10	45	40	50	0 to 300	5,000	-67 (-55)	+257 (+125)	hermetic	Ø.13 thru hole, X2
7500M11	45	5	400	0 to 300	5,000	-67 (-55)	+257 (+125)	hermetic	Ø.13 thru hole, X2
7503A1[3]	30	1,000	2	0 to 400	5,000	-67 (-55)	+257 (+125)	hermetic	Ø.17 thru hole, X2
7503A2[3]	30	400	5	0 to 600	5,000	-67 (-55)	+257 (+125)	hermetic	Ø.17 thru hole, X2
7503A3[3]	30	200	10	0 to 1,000	5,000	-67 (-55)	+257 (+125)	hermetic	Ø.17 thru hole, X2
7503A4[3]	30	80	25	0 to 1,500	5,000	-67 (-55)	+257 (+125)	hermetic	Ø.17 thru hole, X2
7503A5[3]	30	40	50	0 to 2,000	5,000	-67 (-55)	+257 (+125)	hermetic	Ø.17 thru hole, X2
7503A6[3]	30	20	100	0 to 2,500	5,000	-67 (-55)	+257 (+125)	hermetic	Ø.17 thru hole, X2
7503A7[3]	30	10	200	0 to 2,500	5,000	-67 (-55)	+257 (+125)	hermetic	Ø.17 thru hole, X2
7503A8[3]	30	5	400	0 to 2,500	5,000	-67 (-55)	+257 (+125)	hermetic	Ø.17 thru hole, X2
7521A1	3.7	550	2	0 to 1,500	4,000	-55 (-48)	+302 (+150)	epoxy	Ø.08 thru hole, X2
7521A2	3.7	280	5	0 to 1,500	4,000	-55 (-48)	+302 (+150)	epoxy	Ø.08 thru hole, X2
7521A3	3.7	93	15	0 to 1,500	4,000	-55 (-48)	+302 (+150)	epoxy	Ø.08 thru hole, X2
7521A4	3.7	55	33	0 to 400	4,000	-55 (-48)	+302 (+150)	epoxy	Ø.08 thru hole, X2
7521A5	3.7	36	50	0 to 400	4,000	-55 (-48)	+302 (+150)	epoxy	Ø.08 thru hole, X2
7521A6	3.7	18	100	0 to 400	4,000	-55 (-48)	+302 (+150)	epoxy	Ø.08 thru hole, X2
7521A7	3.7	8	225	0 to 400	4,000	-55 (-48)	+302 (+150)	epoxy	Ø.08 thru hole, X2
7523A1[3]	10	550	2	X&Y: 0 to 1,500; Z: 0 to 500	4,000	-67 (-55)	+257 (+125)	epoxy	Ø.08 thru hole, X2
7523A3[3]	10	93	15	0 to 1,500	4,000	-67 (-55)	+257 (+125)	epoxy	Ø.08 thru hole, X2
7523A5[3]	10	36	50	0 to 400	4,000	-67 (-55)	+257 (+125)	epoxy	Ø.08 thru hole, X2
7600B1	3.6	100	5	0 to 600	2,000	-40 (-40)	+176 (+80)	hermetic	R.08 thru hole, X2
7600B2	3.6	50	10	0 to 1,000	2,000	-40 (-40)	+176 (+80)	hermetic	R.08 thru hole, X2
7600B3	3.6	20	25	0 to 1,500	2,000	-40 (-40)	+176 (+80)	hermetic	R.08 thru hole, X2
7600B4	3.6	10	50	0 to 2,000	2,000	-40 (-40)	+176 (+80)	hermetic	R.08 thru hole, X2
7600B5	3.6	5	100	0 to 2,500	2,000	-40 (-40)	+176 (+80)	hermetic	R.08 thru hole, X2
7600B6	3.6	2.5	200	0 to 3,000	2,000	-40 (-40)	+176 (+80)	hermetic	R.08 thru hole, X2

[1] = *IEEE 1451.4 TEDS,* [2] = *Biaxial,* [3] = *Triaxial*

PRODUCT SELECTION GUIDE

IEPE PRESSURE SENSORS

Model	Weight gm	Sensitivity mV/psi	Range psi	Max. Pressure psi	Min. Temp. °F (°C)	Max Temp. °F (°C)	Environmental Seal	Mounting Method
2005V	43	100	50	1,000	-100 (-73)	+275 (+135)	hermetic	1/8-27 thread
2006V2	40	50	100	8,000	-40 (-40)	+250 (+121)	hermetic	1/4-18 thread
2013D	35	2,000	2.5	20	-60 (-51)	+225 (+207)	hermetic	3/4-16 thread
2200V1	6	50	100	1,000	-100 (-73)	+250 (+121)	hermetic	5/6-24 thread
2300V1	6	20	250	5,000	-100 (-73)	+250 (+121)	hermetic	5/6-24 thread
2300V3	6	10	500	10,000	-100 (-73)	+250 (+121)	hermetic	5/6-24 thread
2300V4	6	5	1,000	10,000	-100 (-73)	+250 (+121)	hermetic	5/6-24 thread
2300V5	6	1	5,000	15,000	-100 (-73)	+250 (+121)	hermetic	5/6-24 thread
2300V6	6	0.5	10,000	15,000	-100 (-73)	+250 (+121)	hermetic	5/6-24 thread
2300V7	6	0.33	15,000	18,000	-100 (-73)	+250 (+121)	hermetic	5/6-24 thread
2301B1	5	20	250	5,000	-100 (-73)	+250 (+121)	hermetic	5/6-24 thread
2301B3	5	10	500	10,000	-100 (-73)	+250 (+121)	hermetic	5/6-24 thread
2301B4	5	5	1,000	10,000	-100 (-73)	+250 (+121)	hermetic	5/6-24 thread
2301B5	5	1	5,000	15,000	-100 (-73)	+250 (+121)	hermetic	5/6-24 thread
2301B6	5	0.5	10,000	15,000	-100 (-73)	+250 (+121)	hermetic	5/6-24 thread
2301B7	5	0.33	15,000	18,000	-100 (-73)	+250 (+121)	hermetic	5/6-24 thread

PRODUCT SELECTION GUIDE

CHARGE MODE PRESSURE SENSORS

Model	Weight gm	Sensitivity pC/psi	Range psi	Max. Pressure psi	Min. Temp. °F (°C)	Max Temp. °F (°C)	Environmental Seal	Mounting Method
2180C	155	600	10	600	-60 (-51)	+500 (+260)	hermetic	1 1/8-12 thread
2200C1	7	1	100	10,000	-100 (-73)	+500 (+260)	epoxy	5/16-24 thread
2200C2	7	1	500	10,000	-100 (-73)	+500 (+260)	epoxy	5/16-24 thread
2200C4	7	1	1,000	10,000	-100 (-73)	+500 (+260)	epoxy	5/16-24 thread
2200C5	7	1	5,000	10,000	-100 (-73)	+500 (+260)	epoxy	5/16-24 thread
2200C6	7	1	10,000	15,000	-100 (-73)	+500 (+260)	epoxy	5/16-24 thread
2200C7	7	1	15,000	15,000	-100 (-73)	+500 (+260)	epoxy	5/16-24 thread
2300C1	6.5	0.35	100	15,000	-100 (-73)	+500 (+260)	hermetic	5/16-24 thread
2300C2	6.5	0.35	500	15,000	-100 (-73)	+500 (+260)	hermetic	5/16-24 thread
2300C3	6.5	0.35	1,000	15,000	-100 (-73)	+500 (+260)	hermetic	5/16-24 thread
2300C4	6.5	0.35	3,000	15,000	-100 (-73)	+500 (+260)	hermetic	5/16-24 thread
2300C5	6.5	0.35	5,000	15,000	-100 (-73)	+500 (+260)	hermetic	5/16-24 thread
2300C6	6.5	0.35	10,000	15,000	-100 (-73)	+500 (+260)	hermetic	5/16-24 thread
2300C7	6.5	0.35	15,000	18,000	-100 (-73)	+500 (+260)	hermetic	5/16-24 thread
2301C1	6.5	0.35	100	15,000	-100 (-73)	+500 (+260)	hermetic	5/16-24 thread
2301C2	6.5	0.35	500	15,000	-100 (-73)	+500 (+260)	hermetic	5/16-24 thread
2301C3	6.5	0.35	1,000	15,000	-100 (-73)	+500 (+260)	hermetic	5/16-24 thread
2301C4	6.5	0.35	3,000	15,000	-100 (-73)	+500 (+260)	hermetic	5/16-24 thread
2301C5	6.5	0.35	5,000	15,000	-100 (-73)	+500 (+260)	hermetic	5/16-24 thread
2301C6	6.5	0.35	10,000	15,000	-100 (-73)	+500 (+260)	hermetic	5/16-24 thread
2301C7	6.5	0.35	15,000	18,000	-100 (-73)	+500 (+260)	hermetic	5/16-24 thread

Model	Weight gm	Sensitivity mV/lbf	Compression Range lbf	Max. Compression lbf	Tension Range lbf	Max. Tension lbf	Min. Temp. °F (°C)	Max Temp. °F (°C)	Environmental Seal	Connector
1022V	4.5	100	50	100	50	75	-100 (-73)	+250 (+121)	epoxy	integral cable
1050V1	32	500	10	200	10	200	-100 (-73)	+250 (+121)	epoxy	axial 10-32
1050V2	32	100	50	1,000	50	1,000	-100 (-73)	+250 (+121)	epoxy	axial 10-32
1050V3	32	50	10	2,000	100	1,000	-100 (-73)	+250 (+121)	epoxy	axial 10-32
1050V4	32	10	500	10,000	50	1,000	-100 (-73)	+250 (+121)	epoxy	axial 10-32
1050V5	32	5	1,000	15,000	500	1,000	-100 (-73)	+250 (+121)	epoxy	axial 10-32
1050V6	32	1	5,000	15,000	500	1,000	-100 (-73)	+250 (+121)	epoxy	axial 10-32
1051V1	28	500	10	200	10	200	-100 (-73)	+250 (+121)	epoxy	radial 10-32
1051V2	28	100	50	1,000	50	500	-100 (-73)	+250 (+121)	epoxy	radial 10-32
1051V3	28	50	100	2,000	100	500	-100 (-73)	+250 (+121)	epoxy	radial 10-32
1051V4	28	10	500	10,000	500	500	-100 (-73)	+250 (+121)	epoxy	radial 10-32
1051V5	28	5	1,000	15,000	500	500	-100 (-73)	+250 (+121)	epoxy	radial 10-32
1051V6	28	1	5,000	15,000	500	500	-100 (-73)	+250 (+121)	epoxy	radial 10-32
1053V1	28	500	10	200	10	200	-100 (-73)	+250 (+121)	epoxy	radial 10-32
1053V2	28	100	50	1,000	50	200	-100 (-73)	+250 (+121)	epoxy	radial 10-32
1053V3	28	50	100	2,000	100	200	-100 (-73)	+250 (+121)	epoxy	radial 10-32
1053V4	28	10	500	10,000	200	200	-100 (-73)	+250 (+121)	epoxy	radial 10-32
1053V5	28	5	1,000	15,000	200	200	-100 (-73)	+250 (+121)	epoxy	radial 10-32
1053V6	28	1	5,000	15,000	200	200	-100 (-73)	+250 (+121)	epoxy	radial 10-32
1060V1	460	10	500	10,000	500	1,000	-100 (-73)	+250 (+121)	epoxy	axial 10-32
1060V2	460	5	1,000	20,000	1,000	1,000	-100 (-73)	+250 (+121)	epoxy	axial 10-32
1060V3	460	1	5,000	30,000	1,000	1,000	-100 (-73)	+250 (+121)	epoxy	axial 10-32
1060V4	460	0.5	10,000	40,000	1,000	1,000	-100 (-73)	+250 (+121)	epoxy	axial 10-32
1060V5	460	0.2	25,000	50,000	1,000	1,000	-100 (-73)	+250 (+121)	epoxy	axial 10-32
1060V6	460	0.1	50,000	60,000	1,000	1,000	-100 (-73)	+250 (+121)	epoxy	axial 10-32
1061V1	452	10	500	10,000	500	1,000	-100 (-73)	+250 (+121)	epoxy	radial 10-32
1061V2	452	5	1,000	20,000	1,000	1,000	-100 (-73)	+250 (+121)	epoxy	radial 10-32
1061V3	452	1	5,000	30,000	1,000	1,000	-100 (-73)	+250 (+121)	epoxy	radial 10-32
1061V4	452	0.5	10,000	40,000	1,000	1,000	-100 (-73)	+250 (+121)	epoxy	radial 10-32
1061V5	452	0.2	25,000	50,000	1,000	1,000	-100 (-73)	+250 (+121)	epoxy	radial 10-32
1061V6	452	0.1	50,000	60,000	1,000	1,000	-100 (-73)	+250 (+121)	epoxy	radial 10-32
1203V1	50	50	100	200	N/A	N/A	-100 (-73)	+250 (+121)	hermetic	radial 10-32
1203V2	50	10	500	1,000	N/A	N/A	-100 (-73)	+250 (+121)	hermetic	radial 10-32
1203V3	50	5	1,000	5,000	N/A	N/A	-100 (-73)	+250 (+121)	hermetic	radial 10-32
1203V4	50	1	5,000	10,000	N/A	N/A	-100 (-73)	+250 (+121)	hermetic	radial 10-32
1203V5	50	0.5	10,000	15,000	N/A	N/A	-100 (-73)	+250 (+121)	hermetic	radial 10-32

PRODUCT SELECTION GUIDE

CHARGE MODE FORCE SENSORS

Model	Weight gm	Sensitivity PC/lbf	Compression Range lbf	Max. Compression lbf	Tension Range lbf	Max. Tension lbf	Min. Temp. °F (°C)	Max. Temp. °F (°C)	Environmental Seal	Connector
1050C	32	-18	5,000	15,000	500	1,000	-100 (-73)	+500 (+260)	epoxy	axial 10-32
1051C	32	-18	5,000	15,000	500	1,000	-100 (-73)	+500 (+260)	epoxy	radial 10-32
1060C	460	-9	25,000	60,000	500	1,000	-100 (-73)	+500 (+260)	epoxy	axial 10-32
1061C	420	-9	25,000	60,000	500	1,000	-100 (-73)	+500 (+260)	epoxy	radial 10-32
1210C1	12	-18	5,000	10,000	N/A	N/A	-60 (-51)	+400 (+204)	hermetic	radial 10-32
1210C2	24	-18	10,000	15,000	N/A	N/A	-60 (-51)	+400 (+204)	hermetic	radial 10-32
1210C3	39	-18	20,000	25,000	N/A	N/A	-60 (-51)	+400 (+204)	hermetic	radial 10-32
1210C4	60	-18	40,000	50,000	N/A	N/A	-60 (-51)	+400 (+204)	hermetic	radial 10-32
1210C5	85	-18	60,000	70,000	N/A	N/A	-60 (-51)	+400 (+204)	hermetic	radial 10-32
1210C6	168	-18	80,000	90,000	N/A	N/A	-60 (-51)	+400 (+204)	hermetic	radial 10-32
1210C7	372	-18	100,000	110,000	N/A	N/A	-60 (-51)	+400 (+204)	hermetic	radial 10-32

PRODUCT SELECTION GUIDE

IMPULSE HAMMERS

Model	Head Weight gm	Sensitivity mV/lb	Range lbf	Max. Force lbf	Connector	Overall Length in
58002	100	100	50	1,000	BNC jack	8.7
58003	100	50	100	1,000	BNC jack	8.7
58004	100	10	500	1,000	BNC jack	8.7
58005	100	5	1,000	2,000	BNC jack	8.7
5800SL	2	100	50	75	10-32 jack	4.3
5802A	3 lbs	1	5,000	10,000	BNC jack	15.8
5803A	12 lbs	1	5,000	10,000	BNC jack	35.3
5805A	1 lb	1	5,000	10,000	BNC jack	11.8

Dytran 3023A Series

The Dytran 3023A series is a family of miniature triaxial IEPE accelerometers, available in four different models and each weighing just 3 grams.

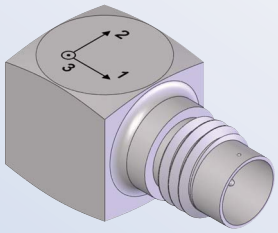

Available with choice of 1, 5 or 10 mV/g sensitivity, units feature a 4-pin radial connector and adhesive mounting. Design of the Dytran 3023A series incorporates three quartz shear sensing elements, packaged in a laser welded titanium housing. Units are hermetically sealed for reliable operation in high-humidity and dirty environments. In addition, the model 3023AH is uniquely capable of operating at temperatures up to +320°F (+160°C). Optional Transducer Electronic Data Sheet (TEDS; per IEEE 1451.4) capabilities are available for larger channel count applications.

Series models 3023A, 3023AH, 3023A3 and 3023A5 are all part of the 3023A series, which feature the same basic construction, varying in terms of their sensitivity, mounting configuration and operating temperature range.

Features

- Triaxial
- Lightweight
- Adhesive mount
- Optional high-temperature version
- Optional TEDS capabilities
- IEPE

Applications

- Environmental Stress Screening (ESS)
- HALT/HASS
- General purpose triaxial vibration measurements

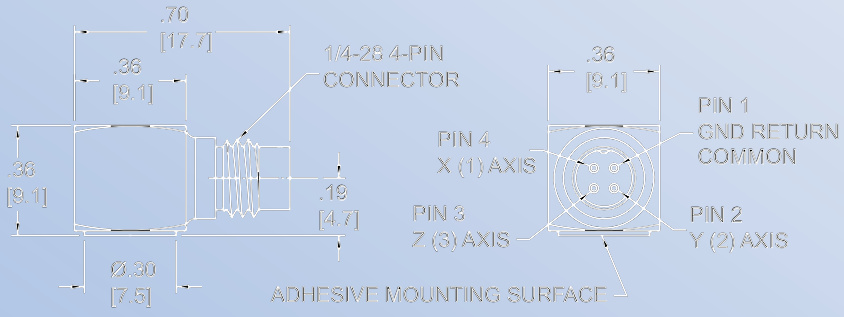

Note: All dimensions are in inches (millimeters).

Specifications	Units	3023A	3023AH	3023A3	3023A5
Weight	oz (gm)	0.11 (3)			
Housing		titanium			
Sensing Element		quartz, shear			
Sensitivity	mV/g (mV/m/s²)	10 (1)	10 (1)	5 (0.5)	1 (0.1)
Range	g (m/s²)	500 (4,903)	500 (4,903)	1,000 (9,807)	5,000 (49,033)
Frequency Response, +15/-5%	Hz	1.5 to 10,000			
Spectral Noise	see appendix	C	C	B	A
Electrical Isolation		no			
Maximum Shock	g (m/s²)	5,000 (49,033)	5,000 (49,033)	5,000 (49,033)	7,000 (68,647)
Temperature Range	°F (°C)	-60 to +250 (-51 to +121)	-60 to +320 (-51 to +160)	-60 to +250 (-51 to +121)	-60 to +250 (-51 to +121)
Thermal Coefficient of Sensitivity	%/°F (%/°C)	0.03 (0.06)			
Environmental Seal		hermetic			
Recommended Accessories					
Cabling		Model 6811A coaxial cable assembly (sold separately)			

Dytran 3023A Series

The Dytran 3023A series is a family of miniature triaxial IEPE accelerometers, available in two models, each weighing just 4 grams.

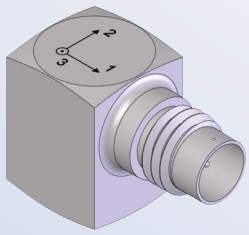

Models 3023A1 and 3023A4 are available with 10 mV/g or 5 mV/g sensitivity, respectively, and feature a 4-pin radial connector and 5-40 stud mounting. Design of the Dytran 3023A series incorporates three quartz shear sensing elements, packaged in a laser welded titanium housing. Units are hermetically sealed for reliable operation in high-humidity and dirty environments. Optional Transducer Electronic Data Sheet (TEDS; per IEEE 1454.1) capabilities are available for larger channel count applications.

Series models 3023A1 and 3023A4 are part of the 3023A series, which feature the same basic construction, varying in terms of their sensitivity, mounting configuration and operating temperature range.

Features

- Triaxial
- Lightweight
- 5-40 stud mount
- Optional TEDS capabilities
- IEPE

Applications

- Environmental Stress Screening (ESS)
- HALT/HASS
- General purpose triaxial vibration measurements

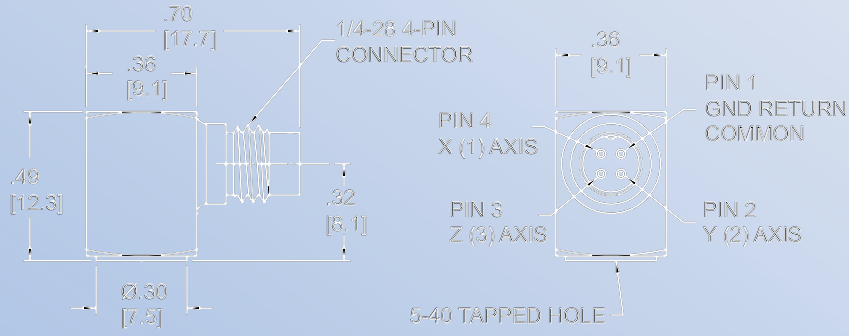

Note: All dimensions are in inches (millimeters).

Specifications	Units	3023A1	3023A4
Weight	oz (gm)	0.14 (4)	
Housing		titanium	
Sensing Element		quartz, shear	
Sensitivity	mV/g (mV/m/s²)	10 (1)	5 (0.5)
Range	g (m/s²)	500 (4,903)	1,000 (9,807)
Frequency Response, +15/-5%	Hz	1.5 to 5,000	
Spectral Noise	see appendix	C	B
Electrical Isolation		no	
Maximum Shock	g (m/s²)	5,000 (49,033)	
Temperature Range	°F (°C)	-60 to +250 (-51 to +121)	
Thermal Coefficient of Sensitivity	%/°F (%/°C)	0.03 (0.06)	
Environmental Seal		hermetic	
Recommended Accessories			
Mounting		One (1) model 6580 (5-40 to 5-40) mounting stud (supplied)	
Cabling		Model 6811A coaxial cable assembly (sold separately)	

Dytran 3023A Series

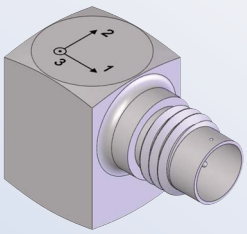

The Dytran 3023A series is a family of miniature triaxial IEPE accelerometers, available in four models, each weighing just 4 grams.

Available with choice of 1, 5 or 10 mV/g sensitivity, units feature a 4-pin radial connector and 10-32 stud mounting. Design of the Dytran 3023A series incorporates three quartz shear sensing elements, packaged in a laser welded titanium housing. Units are hermetically sealed for reliable operation in high-humidity and dirty environments. In addition, the Dytran model 3023A2H is uniquely capable of reliable operation in temperatures up to +320°F (+160°C).

Series models 3023A2, 3023A2H, 3023A6 and 3023A9 are all part of the 3023A series, which feature the same basic construction, varying in terms of their sensitivity, mounting configuration and operating temperature range.

Features

- Triaxial
- Lightweight
- 10-32 stud mount
- Optional high-temperature version
- IEPE

Applications

- Environmental Stress Screening (ESS)
- HALT/HASS
- General purpose triaxial vibration measurements

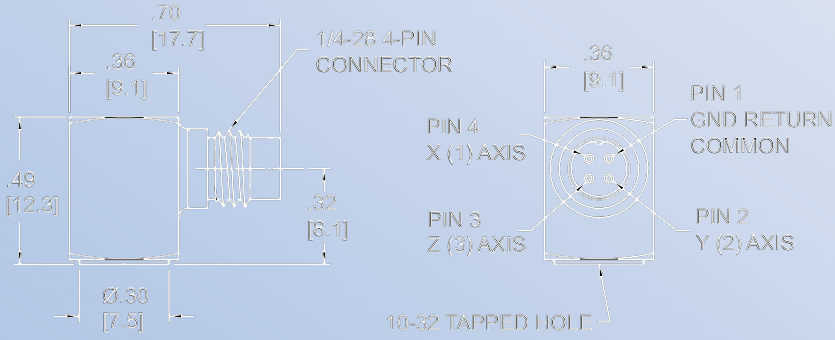

Note: All dimensions are in inches (millimeters).

Specifications	Units	3023A2	3023A2H	3023A6	3023A9
Weight	oz (gm)	0.14 (4)			
Housing		titanium			
Sensing Element		quartz, shear			
Sensitivity	mV/g (mV/m/s²)	10 (1)	10 (1)	5 (0.5)	1 (0.1)
Range	g (m/s²)	500 (4,903)	500 (4,903)	1,000 (9,807)	5,000 (4,908)
Frequency Response, +15/-5%	Hz	1.5 to 5,000	1.5 to 5,000	1.5 to 5,000	0.55 to 5,000
Spectral Noise	see appendix	C	C	B	A
Electrical Isolation		no			
Maximum Shock	g (m/s²)	5,000 (49,033)	5,000 (49,033)	5,000 (49,033)	7,000 (68,647)
Temperature Range	°F (°C)	-60 to +250 (-51 to +121)	-60 to +320 (-51 to +160)	-60 to +250 (-51 to +121)	-60 to +250 (-51 to +121)
Thermal Coefficient of Sensitivity	%/°F (%/°C)	0.03 (0.06)	0.03 (0.06)	0.03 (0.06)	0.02 (0.04)
Environmental Seal		hermetic			
Recommended Accessories					
Mounting		One (1) model 6200 (10-32 to 10-32) mounting stud (supplied)			
Cabling		Model 6811A coaxial cable assembly (sold separately)			